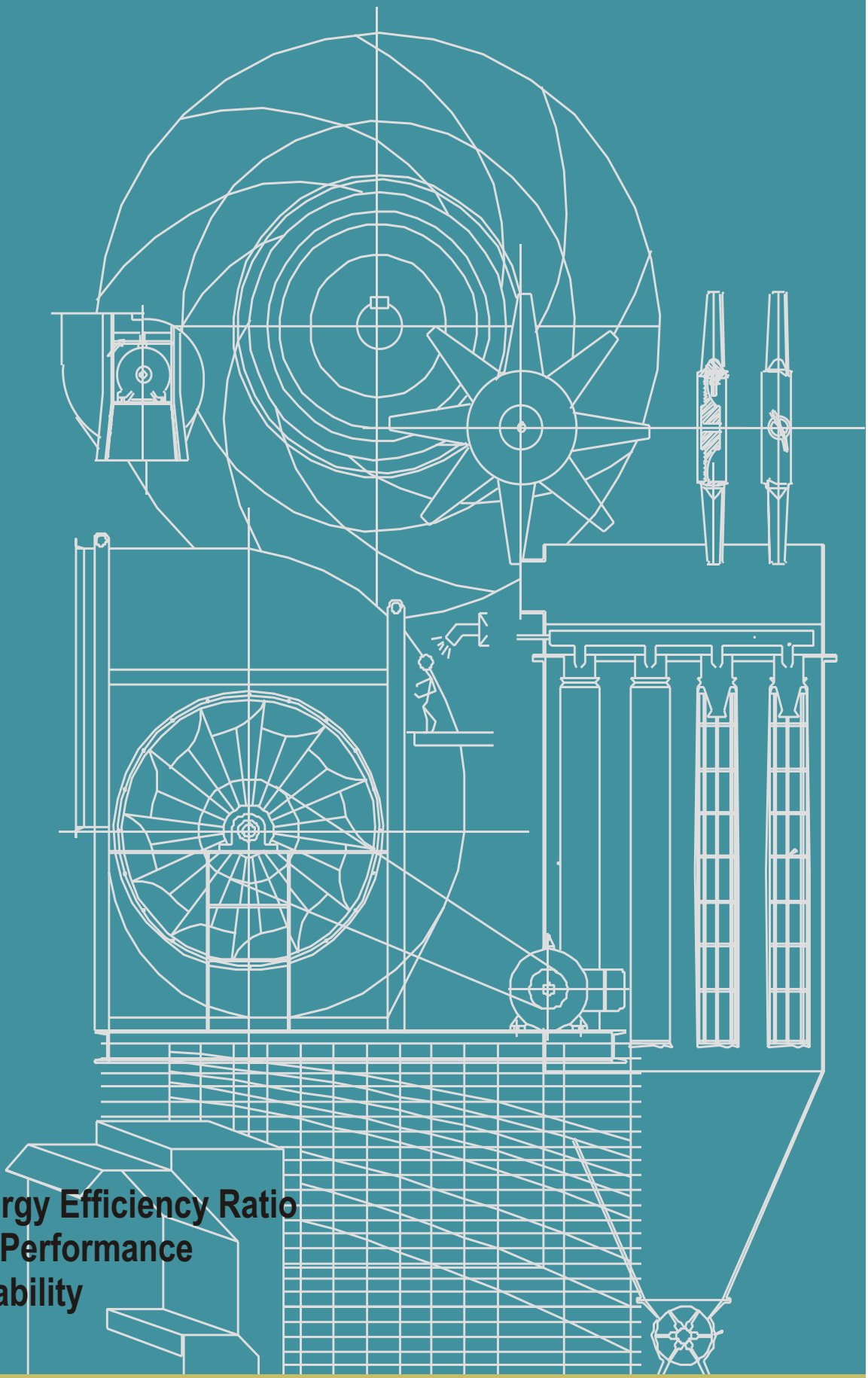

Best in Class Energy Efficiency Ratio
Industry Leading Performance
Time Proven Reliability

PERKINS BLOWERS CO.

Plot No. 100, Phase- IV, Sec-57, HSIIDC, Kundli, Sonepat, Haryana, India
Phone :- 0130-2371755, 6991778, 9671337555 Email Id:- info@perkinsblowers.com, www.perkinsblowers.com

PERKINS

Introduction

Perkins Blowers Co started manufacturing Fans & Blowers, General Ventilation and Air Pollutions Control Equipments way back in 2002. The plant is located in HSIDC Indl. Estate Kundli, Sonepat, Haryana, and equipped with latest Machines. Over these years the company has proliferated its technological base and bringing a wide range of High Pressure Blowers and Systems that are specially designed to meet the requirements of highly sophisticated industrial machines/ applications. Our manufacturing expertise ensures competitive, efficient, robust & energy-saving solutions. Those have acclaimed reputation India-wide for applications in processes involving hazardous, harmful or explosive gases.

Perkins Blowers have proven performance in pressure applications up to 1550 mm of WG. Also developed a new blower series to meet the requirement to meet abundant air quantity at low pressure and low power for general ventilation purpose. Ever since its inception, Perkins operating philosophy has been that of providing its customers with an international quality product at a significant price advantage. We have always focused on backing our excellent quality of production with an efficient after sales service to bring post purchase dissonance down to a negligible level. This has resulted in a situation where virtually no marketing is necessary and demand chases the supply.

Perkins has a well versed sales personnel who possesses years of experience in the field of application engineering and are capable of suggesting a best system for specific requirements; right from conceptualization, engineering, cost analyses, techno commercial report submission, designing, manufacturing, installation and maintenance. We hold the reputation of meeting the rated performance of the installed projects ensuring no time wastage of customer and thereby significantly earning the confidence of customer. We have state of the art facilities for designing and development using CAD & CAM facilities for designing our equipments.

Perkins also takes pride in our custom-tailored solutions that revolve around well-engineered products maintained at competitive prices. All our products are available in an assortment of construction materials including mild and stainless steel, aluminum, plastics or even special alloys to meet the dynamic requirements of application and adopt newer technology as per changing times.

Our motto "Excellence By Design", reflects our commitment to providing the best, from quotation to installation and beyond. We will do everything in our power provide excellence in service to our customers.

As the nature of our Business wherein the sizes are endless; our in-house tool room aids us in adopting and implementing dies, jigs, fixtures “Just in Time” and ensures to meet the delivery target and of course the surface finish of products under manufacturing.

We specialize in working with the following specified Industries: All process plant & Industries, Cement Industries, Textile Industries Spinning & Weaving units, Steel Industries steel re-rolling mills, furnaces, Engineering Companies, Chemical Industries Pharmaceuticals / Fertilizer plants, Glass & Ceramic Industries, Captive Power Plants (Diesel Generators / Turbine Houses/ Boilers), Soap / detergent Industry and many more .....

Perkins

The nature of projects/ equipments we deal with:

* Industrial Axial-Fans
* Industrial Centrifugal Blowers
* Evaporative Air Cooling Systems (Media & Spray Type)
* Air Curtain (For Energy Conservation)
* Roof Extractors
* Cyclone Separator/Dust Collector
* Bag Houses (Bag Dust Collectors)
* Industrial Fume Exhaust Systems
* Wet Scrubber (For Hazardous Gases)
* Sound Proofing (D.G. Enclosure)
* Air Filters (HVAC)
* Air Control & Distribution Equipments (Dampers, Grills & Diffusers)

We also provide General purpose Ventilation Systems, Air Pressurization, and Energy Audit for Air Moving Equipments.

Precise Machineries (Profile Cutting)

Best Welding (MIG/TIG/Spot/Gas)

Exclusive Surface Finish

Computerized Testing (Dynamic Balancing)

Does your utility machineries consuming higher energy and erroding your business margins; consult us for a perfect energy efficient remedy and experience the gain year after year. Hundreds of our "Monumental" projects speaks their performances on their own.

Perkins

Industrial Axial Flow Fans

Perkins Axial Flow Fans covers a wide range of air quantities and pressures, and are suitable for common ventilation of plants as well as special industrial installations.

These fans have cast aluminum alloy impellers with high-efficiency aerofoil section blades. They are designed to optimized the relationship between air quantity, pressure, and power consumption.

These fans can be tailored to various arrangements according to need. Arrangement (X): Direct Driven Vane Axial Fans. Arrangement (Y): Indirect Driven (Belt driven) Vane Axial Fans.

The Vane axial fans are further classified as Fixed blade and Variable pitch Blade Fans. Normally foot mounted motors are used to power the impeller in an direct driven arrangement. In applications where the temperature and/or quality of air does not allow to flow over motor, we manufacture axial fans power train in IP55 Enclosure using ball bearings and V-Belt drive arrangement; virtually all parts become unexposed to the handled air.

Vaneaxial Fans Die Casted Aluminum Fans

Model	RPM	Motor	CAPACITY (CMH) AT VARIOUS STATIC PRESSURES										Limit Load
		HP	Free Delivery	6mm	12.5mm	19mm	25mm	32mm	38mm	45mm	50mm	65mm	HP
PV-380	2860	1.5	7820	7650	7480	7200	6800	6375	5780				0.056
	1400	0.25	3825	3340									
PV-450	2860	5	13515	13300	13050	12800	12500	12070	11650	11100	10500	8925	0.14
	1400	0.5	6610	6050	4970								
PV-530	1440	1.5	10838	10250	9270	7900							
	930	0.5	6970	5780									0.303
PV-610	1440	2	16150	15540	14580	13350	11690						
	930	0.75	10405	9180									0.588
PV-710	1440	5	25602	24900	24050	23000	21200	19720	17200				
	960	1.5	17040	15850	13685								1.27
PV-815	1440	7.5	38080	37400	36380	35360	34000	32300					
	1440	10							30450	28220	24650		2.47
	960	2.5	25330	24055	22100	19125							
PV-915	1460	15	55040	54230	53300	52200	51000	49640	47770	45800	43180	37400	4.47
	960	5	36150	35020	32980	30100	26265						
PV-1065	960	10	57800	56270	54400	51700	48025	43690	38200				9.65
	720	5	43265	40970	37000	31500							
PV-1220	960	20	85765	83300	82650	80325	76840	42850	68200	62560	56000		18.8
	720	7.5	64400	61880	58750								
	720	10				53800	47000						
PV-1370	970	30	123500	121890	119680	116960	113900						
	970	35						72845	106760	102000	96730	83250	33.8
	720	15	91530	89760	84830	80240	74800	66980	57000				

(Higher sizes upto 1600 mm can be manufactured upon specific requirements)

Energy Efficient Fans

Perkins has developed a new Energy Efficient Series Fans of Al & GRP-Material to save the power up to 10% of the conventional fan impellers. These impellers have adjustable pitch blade (10 to 40 Deg.) and Operating temperature range from -40 to 110 Deg Cel. Max. & Efficiency 86%.

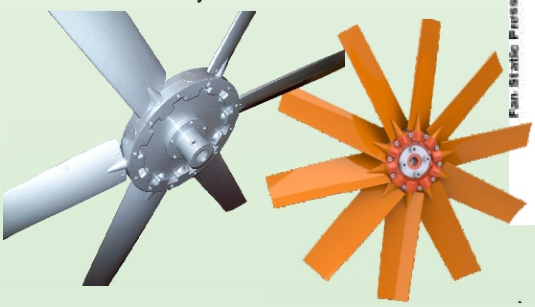

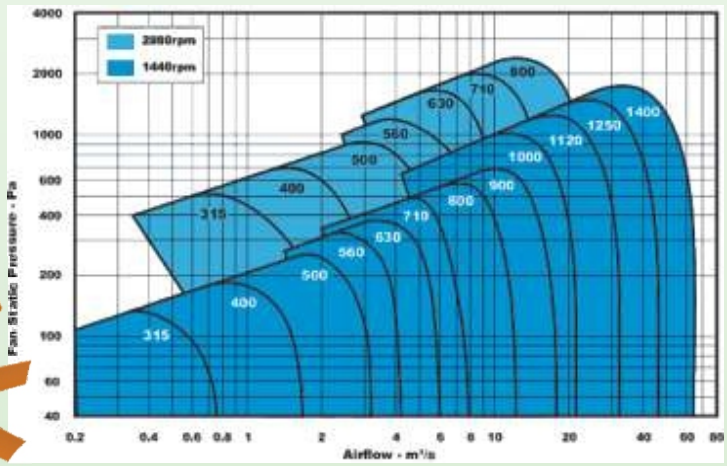

PERKINS

Perkins

Vane Axial Fans with Aluminium Blades

Vane Axial Fan, with Aluminum Blades in Direct Driven arrangement. Normally used for Industrial-purpose Ventilation and Exhaust applications.

Applications:

- Textile Humidification
- Captive Power Plant Ventilations
- Generator Canopies
- Supply Air
- Exhaust/Venting applications

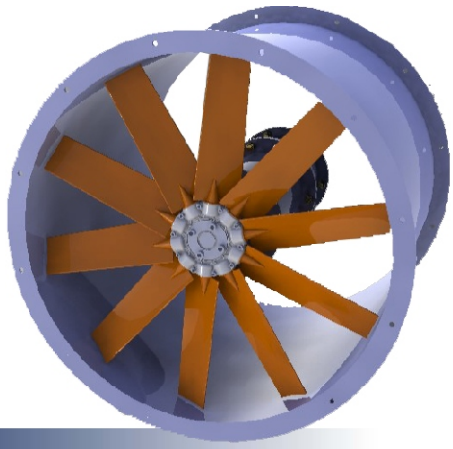

Vane Axial Fan with GRP Blades

Vane Axial Fan with GRP Blades (Energy Efficient Series) in Direct driven arrangement. Normally used for general-purpose ventilation and exhaust.

Applications:

- Generator Canopies
- Exhaust Air Axial Flow Fan
- Roof Extractor
- Booster Fans for in-line ducts etc.

Bifurcating Fan

Bifurcating Fan with Aluminum/GRP Blade. Normally used for High temperature & dusty air/fumes.

The Drive motor gets ventilation from a different chamber (usually exposed to atmosphere).

The process air is generally ducted at both ends of fans and travells without stricking electric motor.

A drop in efficiency of around 25% is to be reckoned for such selections.

Vane Axial Indirect Driven Fan

Vane Axial Fan with Aluminum/GRP Blade in Indirect Driven arrangement (V-Belt driven).
Normally used for High temperature & dusty air/fumes.

All the impellers are available in wide ranges of dia. and number of blades to achieve coverage entire applications possible. Each impellers is statically and dynamically balanced on micro processor controlled computerized machine as per IS-1940 balance quality grade G-6.3.

Perkins

Centrifugal Fans

Perkins Centrifugal Fans are well engineered, high efficiency, Low noise air moving blowers, are manufactured with latest machineries to meet the requirement of process / clean air handling applications in Foundry, Power Plants, Engineering Industries and Cement Producing Plants.

These Fans are provided with single and multiple (Parallel or series operation) impellers to suit wide range of air discharge and pressure development combinations.

These Fans are made in a wide range of impeller sizes varying from 200 to 2750mm diameter having air-handling capacities of 500CMH to 3,00,000CMH, while the pressure developed by the fan could be as high as 1500 mm WG (Reference air/gas density of 1.20 Kg./cu.mtr.).

These Fans can be fabricated in Mild Sheet Steel/ SS-304/ SS-316-L/ SS-310/ Aluminum alloy & FRP Coated at reasonably higher thickness. We provide exclusive surface finishing & coating such as Hard Chrome grounded Shaft, Enamel/ Epoxy / PU/ Rubber seal paints.

The impeller blades are multibladed construction with its blade of special contour engineered to handle varied quality air streams. Based on application/ air quality the fan impellers cans be selected.

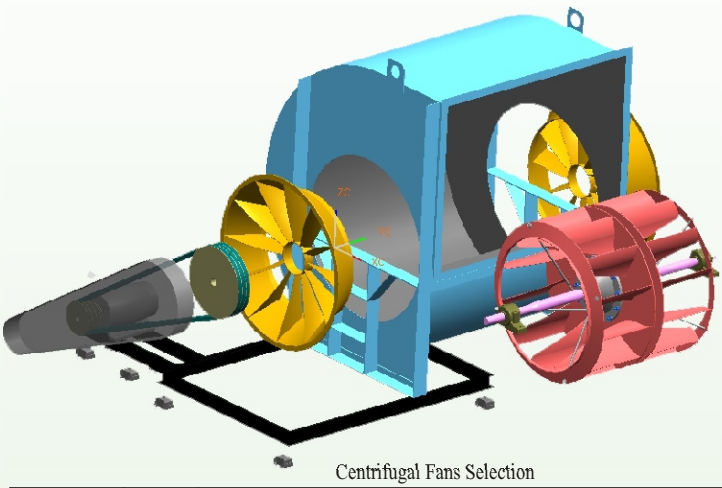

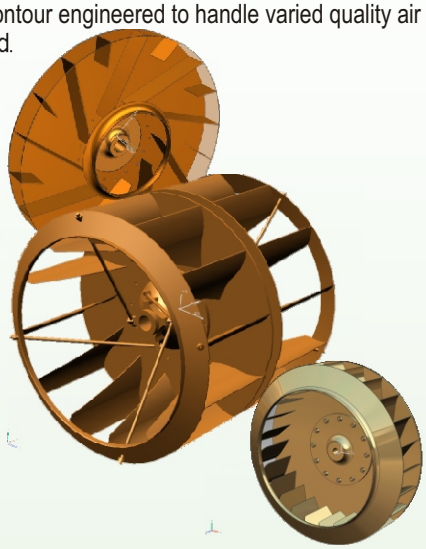

Centrifugal Fans Selection

Centrifugal Fans with different geometry Blade & related performance.		The fans are selected based upon the required Air Quantity (CFM-Cubic Foot per minute/ CMH-Cubic Meter per Hour), the air path resistance measured as total pressure drop (mm of WG-millimeter of water guage), temperature of air in degree celcius, and the application where in the fan has to dischage/handle quality of air/dust/fume etc. Further the fans are classified quality of Fan Arrangements & Orientation such as "Arr(X)"=Direct Dirven & "Arr(Y)"=Indirect (Belt) Driven, "CCW"=Counter Clock Wise Rotation from driven end & "CW"=Clock Wise Rotation from drives end, "DIDW"=Double Inlet Double Width & "SISW"=Single Inlet Single Width Fans.	Cleane Air / Gases	Air / Gases with low Dust containt	Air / Gases with High Dust containt	Air / Gases with Adhasive Dust	Grains & Similar Material
Forward Curved Blade	**PLBF** Low Pr. Foward Curve Blade	The fan wheel has foward-curved blade. These are silent-running low pressure fan for use in industrial and comfort ventilation plants. It covers the flow ranges up to 50,000CMH and pressure up to 85mm of WG.	●				
'S'Shppe Blade LD Series	**PLLD** Low Pr. Back limit-Load Series	The fan wheel has back-curved with special "s" profile blade. These are silent-running low pressure fan with huge air quantity for use in industrial and comfort ventilation plants. It covers the flow range up to 3,00,000 CMH and pressure up to 75mm of WG. The inlet guide vanes makes these blowers industrial leading in energy efficiency.	●				
Back Curved and Inclined Blade	**PLBB** Low Pr. Back-curve	The fan wheel has back-curved blade. It covers the flow ranges up to 2,40,000 CMH and pressure up to 150mm WG. It highest total efficiency is 83-86%, depending upon the size of fan	●				
	PMMB Medium Pr Backcurve	The fan wheel has back-curved blade. It covers the flow ranges up to 2,50,000 CMH and pressure up to 450mm WG. Its highest total efficiency is 83-86%, depending upon the size of fan	●				
	PHHB High Pr. Back-curve	The fan wheel has back-curved blace. It covers the flow ranges up to 40,000 CMH and pressure up to 1200mm WG. Its highest total efficiency is 83-86%, depending upon the size of fan	●				
Radial Blade	**PMLR** Medium Low Pr. Radial-curve	The fan wheel has radial-curved self cleaning blade. It covers the flow ranges up to 2,30,000 CMH and pressure up to 300mm WG. Its highest total efficiency is 75-85%, depending upon the size of fan.	●	●			
	PMMR Medium-Medium Pr. Radial-curve	The fan wheel has radial-curved self cleaning blade. It covers the flow ranges up to 3,00,000 CMH and pressure up to 600mm WG. Its highest total efficiency is 75-85%, depending upon the size of fan.	●	●			
	PMHR Medium High Pr. Radial-curve	The fan wheel has radial-curved self cleaning blade. It covers the flow ranges up to 1,20,000 CMH and pressure up to 800mm WG. Its highest total efficiency is 75-85%, depending upon the size of fan.	●	●			
Straight Radial Blade	**PSLS** Low Pr. Straight-Radial	The fan wheel has straight radial blade. It covers the flow ranges up to 30,000 CMH and pressure up to 80mm WG. Its highest total efficiency is 65-80%, depending upon the size of fan.		●	●		
	PMLS Low-Medium Pr. Straight-Radial	The fan wheel has straight radial blade. It covers the flow ranges up to 30,000 CMH and pressure up to 200mm WG. Its highest total efficiency is 65-80%, depending upon the size of fan.		●	●	●	●
	PMMS Medium-Medium Pr. Straight-Radial	The fan wheel has straight radial blade. It covers the flow ranges up to 40,000 CMH and pressure up to 400mm WG. Its highest total efficiency is 65-80%, depending upon the size of fan.		●	●	●	●
	PHMS High-Medium Pr. Straight-Radial	The fan wheel has straight radial blade. It covers the flow ranges up to 50,000 CMH and pressure up to 600mm WG. Its highest total efficiency is 65-80%, depending upon the size of fan.		●	●	●	●
	PHHS High Pr. Straight-Radial	The fan wheel has straight radial blade. It covers the flow ranges up to 40,000 CMH and pressure up to 1000mm WG. Its highest total efficiency is 65-80%, depending upon the size of fan.		●	●	●	●

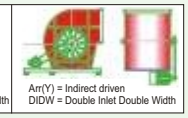

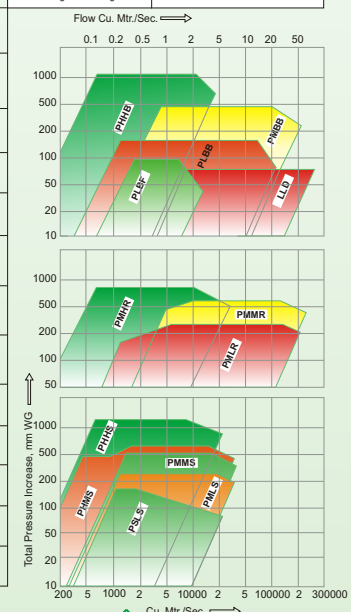

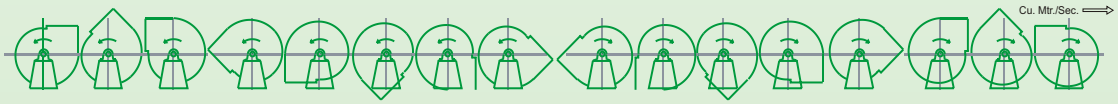

Direction of rotation is determined form drive end of fan

PERKINS

General Purpose Low Pressure Fan

LOW PRESSURE SERIES : These centrifugal air blowers are used where a large quantity of air at relatively low static pressure is required. These blowers finds applications in general purpose ventilation, air handling unit etc. and are available in SISW & DIDW construction. The low pressure centrifugal air blowers finds applications for wide variety of machineries as fitted by OEMs such as textile machine manufacturers, powder coating plants etc.

Industrial Purpose Medium Pressure Fan

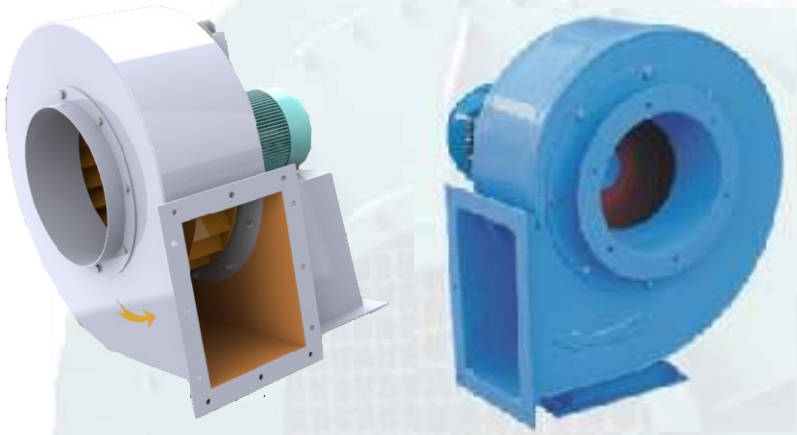

These SISW blowers are used in various applications covering dust extraction / fume extraction and are widely used in cyclone separators, bag house dust collectors, both inlet and outlet are flanged to receive duct connections.

Industrial Purpose High Pressure Fan

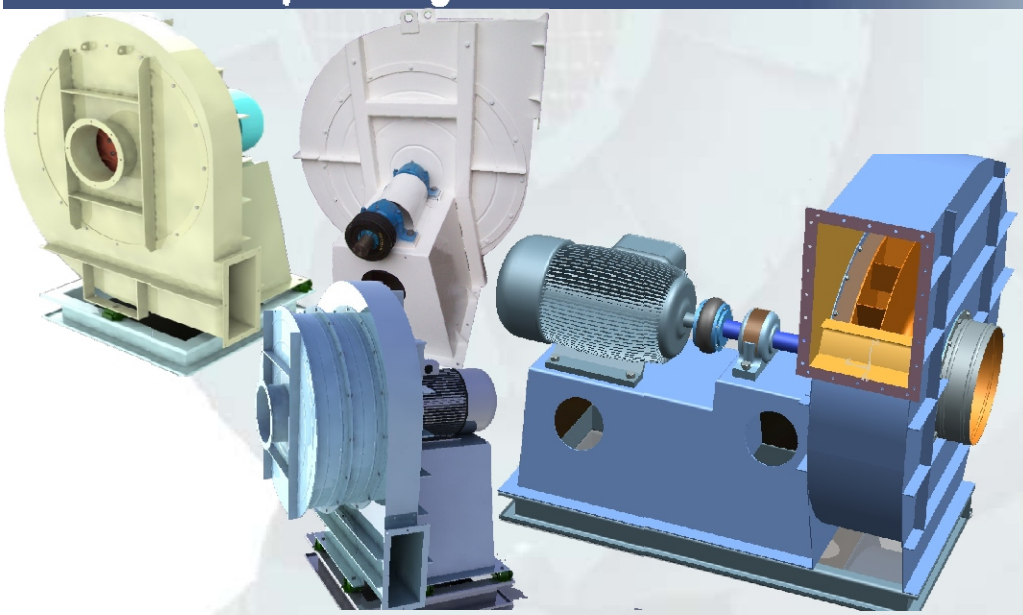

These SISW blowers meets the heigest range of pressure upto 1200 mm Wg which can be achieved by using a centrifugal action. These are extremely used in wide variety of applications such as glass plant, furnaces, high pressure dust extraction systems, boilers, incinerators etc.

All the above mentioned models are made in various bill of materials such as Mild steel, stainless steel, Fibre glass reinforced plastic coated etc to meet various levels of operating temperature, corrosive nature, dust particle effect etc. the blade geometry and the air delivery angle is made as per site specific requirements as explained in our business catalogues pages.

Fan Fundamentals:

Air quantity (Volume flow Rate) q.,in Cubic Meter per unit of time (cu.mtr/sec)

Pressure p, in millimeter of water gauge (mm WG);

1mm WG= 1 Kgf/sq.mt .

The total pressure Pt is measure of the energy supplied to the air flow passing through the blower in quantum is an algebraic sum if the static pressure Ps. And the velocity pressure Pd.

$$Pt=Pd + (Ps)$$

The static pressure is equal to the manometer pressure as measured perpendicular to the direction of flow. The velocity pressure is measure of the kinetic energy of the air. It is calculated from the formula.

$$Pd = \frac{1}{2} . 9.y.V.V)/g$$

Where v is the air velocity in m/sec, y is the density if the air in kg.cu.m (which referring to a temperature of 20Deg. Cel. a relative humidity if 50% and barometric pressure of 760 mm mercury is equal to 1.2kg.cu.mt and g acceleration due to gravity = 9.81m/sec./sec..

The Power required Me; bhp

The power required is calculated from the formula

$$Me = q \times Pt / 75. n$$

Where n is the total (mechanical) efficiency of the blower.

Perkins

Evaporative Air Cooling Systems

Perkins Evaporative Air Cooling Systems are designed to meet today's growing demand for increased sensible cooling with extremely low energy consumption. This Media and Spray type cooler provides the most universal, high saturation efficiencies available with evaporative cooling today. Whether they're used to cool an entire facility or simply to spot cool the specific areas. It is used in industrial, institutional, commercial, residential, agricultural etc…

It is constructed in a wide choice of design, capacities & materials. Its capacity from 1,000 CMH to 2,50,000 CMH air quantity and static up to 75mm of WG using Axial or Centrifugal Fans are available in Plastic, GI, MS, FRP, and /or Stainless Steel 304 construction.

It has following outstanding features:

1) Using world class DIDW High Efficiency Centrifugal Blower.
2) Dynamically balanced industrial duty Blower wheels.
3) Long life self-aligning Pillow Block Bearings.
4) Complete Prefabricated Moduler construction.
5) Low RPM, low outlet velocity design to give longer trouble free and low noise running.
6) It has low Power Consumption.
7) Cushy foot mounted at the base for vibration free running.
8) Choice of Top, Bottom or Side discharge.
9) Air filtrations up to 0.5 Microns with 98% efficiency.

Media Evaporative Cooling

The Media Evaporative Cooling Pad made of cellulose paper, specially treated media capable of absorbing and retaining water to provide the maximum cooling efficiencies. The saturation efficiency ranging from 50 to 98%, can be achieved depending upon air velocity (1m/s to 3.5m/s) and depth (200mm to 700mm) flute height 6.5mm. The water is collected below the bottom of the pad and is re-circulating again by a pump through the unique distribution system. The equipment is designed to maintain room temperature around 28-32 Deg. Cel. and 60-65% RH.

Spray Evaporative Cooling

The Spray Evaporative Cooling systems, water are pumped thorough specially designed NOZZELS (Wide orifice Nylon Clamp-on type), which forms thin water film of 500mm dia. The hot ambient air cross thru, this film and loose the temperature. Thus the desired temperature and humidity can be attained by number of banks of nozzles. The cool air is separated from mist by specially designed PVC Mist-Eliminator.

These air washers are available in both Sheet fabricated (Single Skin & double skin with puff-insulated type) and masonry construction. The water tank in SS-304/FPR lined. All the components used in air washer in non-ferrous material only.

The saturation efficiency ranging from 65 to 99% can be achieved depending upon the banks. The equipment is designed to maintain room temperature 28-32 Deg. Cel, and 65%-85% RH. These are specially used in Textile industry, Power Generation Halls, Cement Plants etc.

PERKINS

Perkins

Air Curtain *(for Energy Conservation)*

Perkins Air Curtain is designed specially for Pharmaceutical and Food Processing Industries, where in a thin film of Air at High velocity which divides/ isolates two different environments. It is used in various other applications where in two different areas (Clean & Dusty Air) are to be isolated by a jet of air film.

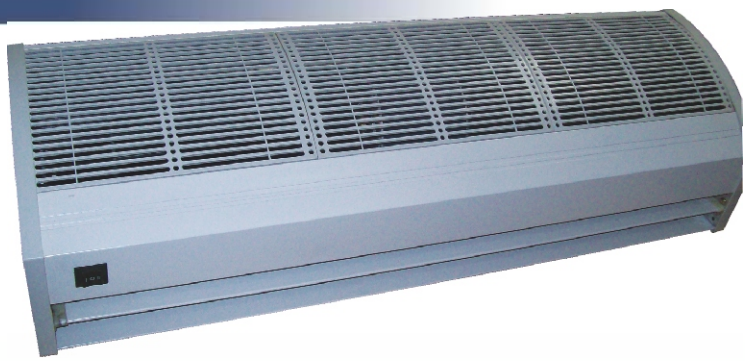

MODEL	SPECIFICATIONS	OPR.HEIGHT
PVC-036	Suitable for door width ranging from 915mm(3 ft) to 1066mm (3 ½ ft)	Up to 3440mm
PVC-048	Suitable for door width ranging from 1220mm(4 ft) to 1370mm (4 ½ ft)	Up to 3440mm
PVC-060	Suitable for door width ranging from 1524mm(5 ft) to 1675mm (5 ½ ft)	Up to 3440mm
PVC-072	Suitable for door width ranging from 1828mm(6 ft) to 1980mm (6 ½ ft)	Up to 3440mm

While ordering the height of opening/door must be specified.

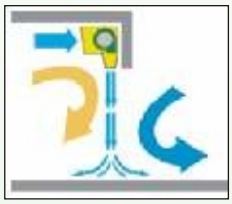

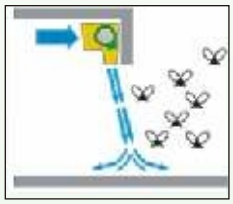

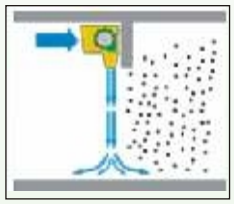

Roof Extractor

Perkins Roof Extractor is suitable for Flat and Inclined Roof. The Impeller is made of aerofoil section blade with high efficiency and is dynamically balanced. These fans are low noise, robust construction and vibration free as per VDI-2056 with Aerodynamic testing as per IS-3588 for Axial flow fans type & IS-2312 for Exhaust fan type.

Roof Extractors are available in various sizes, and materials such as MS, SS-304, SS-316, GRP, FRP, PP, Rubber and Epoxy lined.

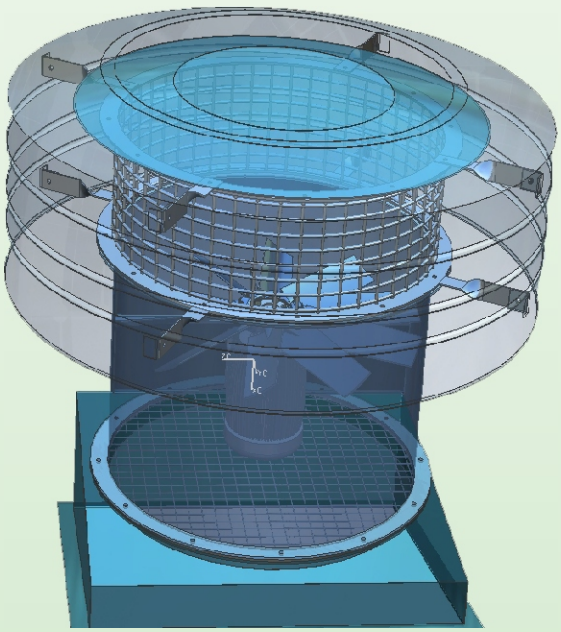

Fan Model	Capacity "CMH"	Speed "RPM"	Motor "HP"
PRX-600	8000	1440	1.0
PRX-700	15000	1440	2.0
PRX-800	23000	1440	3.0
PRX-900	17500	925	2.0
PRX-1000	27000	925	3.0
PRX-1200	33000	710	5.0

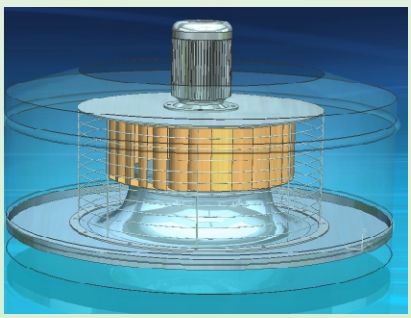

Perkins

Cyclone Separator/Dust Collector

Cyclon separator is a equipment where in air with heavy concentration of dust of moderate size particles enters at high velocity to long tapered cone were in air forms large helix, due to centrifugal action the dust particles easily separate out of the air and thus the clean air rises through centrally placed vertical pipe, which is directly connected to the inlet of high pressure centrifugal fan.

Dust collectors are available as single units that attach directly to individual machines, or central systems that, when properly configured, provide coverage for the entire machine in the shop.

A dust collection consists of a collection hood, ductwork, rotary airlock or side gate and direct driven or indirectly belt driven high static back-curved fan.

Applications: Stainless Steel Buffing, Wood Sawing, Glass/Ceramic other powder materials, Power coating plants, Metal/Abrasive grinding, Any industrial process yielding dust particles having some inertia.

Model	CMH	Motor HP	Inlet/ Outlet	Wt. Kgs.
PT18-1	1200/1450	1	6-7"	400
PT19-3	1450/2000	3	7-8"	500
PT20-3	2100/3400	3	8-10"	730
PT20-5	2550/4250	5	8-10"	750
PT24-7	3400/6000	7.5	10-12"	850
PT30-10	5100/7850	10	12-14"	1100
PT30-15	6800/9850	15	12-14"	1400
PT36-20	7200/11900	20	14-16"	2500
PT36-25	7650/12750	25	14-16"	2800
PT36-30	8500/13600	30	14-16"	3000
PT44-35	13600/18700	35	18-20"	3400

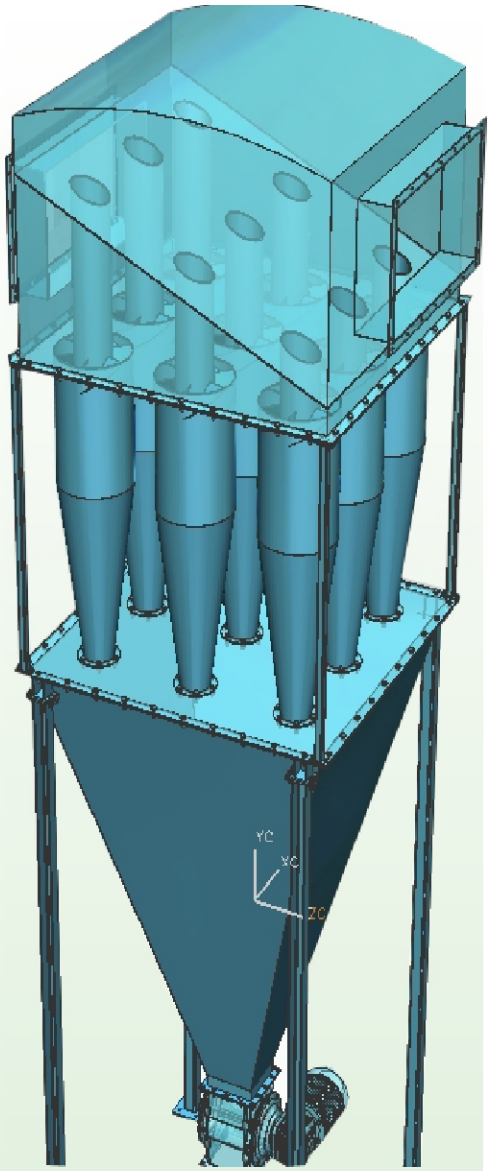

There are numerous advantages to dust collection:

1. Health: Numerous medical studies have deemed dust a major respiratory hazard. Legal obligations:
2. Beyond workers compensation, other legal ramifications exist as well.
3. Fire Hazards: Controlling the dust will reduce the risk of fire.
4. Finishing Quality: An abundance of dust in the shop also can create problems in finishing. That either results in reworking and lost production time or lower product quality.
5. Reduces accidents: Clean atmosphere increases illumination, clean floorings, etc reduces accidents.
6. Employees Morale: Clean area and better working conditions, people are happier and more production.
7. Equipment Maintenance: Less dust reduces the maintenance/ breakdowns.
8. Product Recovery: At times it yields in product recovery in case of high value raw material.

PERKINS

Bag Houses *(Bag Dust Collectors)*

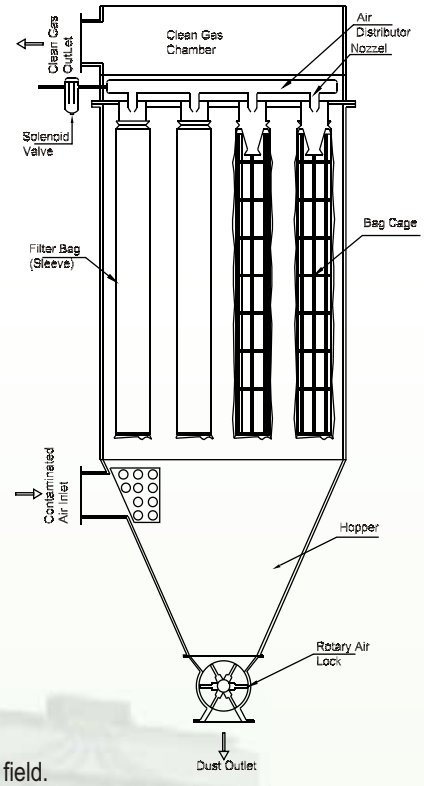

Perkins bag-house is nothing more than a "house full of bags." The bags are usually made of cotton, wool, synthetic, or glass fibers, and there may be hundreds of bags within one structure. This kind of fabric filtration is a well-known and practiced method for separating dry particles from a stream of gases (usually air or combustion gases). The dusty gas flows into and through the fabric, leaving the dust on the inside of the bag, while the cleaned gas exits through the bag to the other side and then out the bag-house.

There are many different types of fabrics, different sizes of bags, different ways of flowing the gases through the bags, and different ways of cleaning the bags within the bag-house. Extended operation of a bag-house requires that the bags be periodically cleaned, and that the dust be removed from the bag-house. The three common types of bag-houses (based on cleaning methods) are shaker, reverse-air, and pulsejet bag-houses. In a shaker bag-house, the dusty airflow is blocked from the compartment to be cleaned, and the bags are shaken to knock off the dust. In a reverse-air bag-house, the dusty airflow is blocked from the compartment to be cleaned, and the clean air is forced to flow gently backwards through the bags, dislodging the particles. In a pulsejet bag-house, a blast of compressed clean air flows briefly into the bags, while they are still filtering dusty air, knocking off some dust. In all cases the dislodged chunks of dust fall by gravity and is collected in hoppers, and can be removed without further disturbing the air filtering process.

Bag-houses have several advantages and disadvantages as shown below:

Advantages of bag-houses

- High collection efficiencies even for very small particles.
- Can operate on a wide variety of dust concentration.
- Modular in design and construction; modules can be manufactured in the factory and assembled in the field.
- Reasonable pressure drops.

For most bag-houses, the superficial filtering velocity must be kept very low (just a few meter per second) in order to provide for good filtration, and to avoid large pressure drops (and the accompanying high operating costs). Therefore, if we have a large gas flow to treat, we must provide an enormous amount of cloth area.

Pulse-jet bag-houses have been introduced to the industry relatively recently (within the last 40 years), and have captured a large share of the bag-house market due to their advantages over traditional shaker or reverse-air methods of cleaning. In the pulse-jet bag-house, the bags are supported on wire cages, and the air is filtered from the outside of the bag to the inside, leaving the dust on the outside. A short pulse of high-pressure (about 100 psi) air is blasted through a venturi nozzle into the center of the bag, causing the fabric to ripple and knock off the dust from the outside. This happens every few minutes control by a microprocessor based sequential timer unit having a adjustable pulse time & pause time.

These bag-houses are designed as one large compartment, and operate continuously. The bags are cleaned by this pulse of air every few minutes, but are not taken off-line during cleaning. In addition, the fabric used to make bags for a pulse-jet bag-house is much thicker and sturdier than that used in a shaker or reverse-air design, so the filtering velocity can be considerably higher in a pulse jet system than in the other types. This combination of higher filtering velocities and no extra compartments, allows the pulse-jet bag-house to be much smaller (for the same dusty air flow) than a traditional bag-house. This also makes the pulse-jet cheaper to buy.

Perkins

Industrial Fume Exhaust Systems

Most of industries, are equipped with latest/conventional machines which liberate lot of heat, gases and fumes to the surrounding which are required to be taken out of the working areas (un-treated) and dissipate out through chimney at good stack height. This system needs a blower/fan to draw the gases from the source through hoods and conveyed through ductings and chimney.

These fume exhaust applications finds varied scope in Automobile/Auto parts manufacturing facilities such as fasteners/ball bearing/engine parts etc. which requires machining in presence of oil. Perkins Fume Exhaust Systems advantages are that the hoods are well designed for adequate capture velocity, consistent duct designing and centrifugal air blower selected in a way to after years of trouble free operation. As oil/fumes flow through the blower wheel; it is usually selected in self cleaning blade geometry.

Wet Scrubber *(for Hazardous Gases)*

A large number of Industrial processess generate foul air/gas streams which contain toxic or corrosive materials and therefore, require to removed from the gas stream before the air/gas stream is released to the atmosphere outside/environment. One of the most effective methods for cleaning of contaminated air/gas stream is by using a Wet Scrubber. This is a device in which a liquid that will dissolve the contaminant in to the liquid/solvent.

In Plate Scrubbers, each plate a reservoir which holds water through which the contaminated air is bubbled, thereby scrubbing out the contaminant. The water displaced by the steady feed of water on top of the plate and the final effluent water is withdrawn from the bottom of scrubber. Since the plate are always full of liquid on it, there is no need to maintain a high flow rate of water to keep the tower flooded. The reservoir of water on the plates enables the tower to absorb sudden surge of acid gas, which sometimes occur when the work is added to pickling tanks.

Each plate contains hundreds of holes and each hold acts a miniature venturi scrubber so that the whole plate is a mass of bubbling water providing highly efficient contact of foul air and water. As the water flows from upper to the lower plate the water at lower becomes stronger and stronger in recovered acid, and as the air passes through each plate upwardly it becomes cleaner and cleaner.

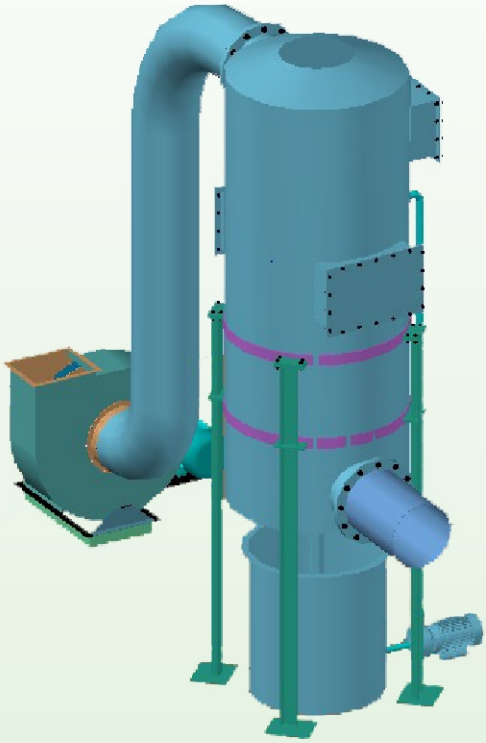

The tipical applications of the scrubbers are as below:

1. Fume extraction Scrubbing on batch, rod or coil pickling tanks having acid bath of sulphuric, Nitric or Hydro-chloric acids.
2. Fume extraction Scrubbing on continuous strip pickling tanks having acid bath of sulphuric, Nitric or Hydro-chloric acids.
3. Fume extraction Scrubbing in Glass Etching industry-using hydro-flouric acid.
4. Fume extraction Scrubbing in Electro plating industry-using Chlromic acid, Sulphuric acid and other acid baths.
5. Fume extraction Scrubbing in process industry involving acid fumes/vapours, and water soluble particulates matters/powders.

PERKINS

Perkins

D.G. Enclosure *(For Sound Proofing)*

PERKINS DG Enclosure fabricated out of heavy duty 14SWG-CRCA Sheets and pre- fabricated members to ensure most robust. All the four sides and top are insulated with 75-100mm thick mineral-rock / fiber wool slabes of minimum 96 Kg/Cu.Mtr. density conforming to IS 8183-18993. The insulation is covered by fire resistent fiber cloth to prevent the decaying of insulating material . It is further covered with 22 SWG to GI/Aluminium - perforated sheet. For modifying reverberation , sound absorbent material are used which results sound level of 75 db at 3 Mtr. Distance . All sides of encloser are provided with suitable size of airtight doors, which gives enough access for operator to carryout day-to-day maintenance. The Doors are provided with durable locking system.

Ventilation supplies fresh air for cooling. It also removes contaminants and heat. Proper care is taken for air requirement of Disiel Generators (considering ambient temp. above 40 Deg. Celcius) so that the requisite air-circulation for engine aspiration, heat rejection and additional dissipation of heat generated in encloser by the engine is reduced, Industrial Axial Flow Fan made up of GRP material, high temp. resistant ,aerodynamic design,duly balanced Fans are used. The enclosure draws fresh air from one end of enclosure and discharge from the other end thereby maintaining cross ventilations.The temperature of enclosure does not exceed beyond 7 deg. of ambient temperature.

Engine Rating KVA	Radiator FanFlow CuMt/Hr	Ventilation &Breathing Air CuMt/Hr	AccEncl. Model	Acoustic Enclosure Dim. Length mm	Width mm	Height mm	Fan Model (AxialFlow)	Fan Power H.P.	Radiator CoreArea H(m)xW(m)
2000	116,226	150,894	PDG12E	11,000	3,300	3,300	1000/14/4Px2	20x2	2.3x2.4
1875	116,226	138,690	PDG11E	9,000	3,000	3,300	1000/14/4Px2	20x2	2.3x2.4
1500	102,240	125,838	PDG11E	9,000	3,000	3,300	1000/14/4Px2	20x2	2.2x1.95
1250	98,550	113,310	PDG11E	9,000	3,000	3,300	1000/14/4Px2	15x2	2.1 x 2
1000	85,878	97,128	PDG11E	9,000	3,000	3,300	900/14/4Px2	15x2	1.9x1.8
750	81,558	78,462	PDG10E	7,500	2,500	2,800	900/7/4Px2	7.5x2	1.9x1.65
625	81,558	63,972	PDGo9E	7,000	2,400	2,500	900/7/4Px2	7.5x2	1.9x1.65
600	67,968	62,658	PDGo9E	7,000	2,400	2,500	900/7/4Px2	7.5x2	1.9 x 1.6
500	73,008	51,876	PDGo9E	7,000	2,400	2,500	900/14/4Px1	20.0	1.48x1.58
450	46,800	47,196	PDGo8E	5,500	2,000	2,450	900/7/4Px1	15.0	1.48x1.58
380	37,386	43,452	PDGo8E	5,500	2,000	2,450	900/7/4Px1	12.5	1.58x1.48
320	36,252	33,786	PDGo7E	5,200	2,000	2,450	800/12/4Px1	10.0	1.18x1.22
285	36,252	32,310	PDGo7E	5,200	2,000	2,450	800/12/4Px1	7.5	1.08x1.27
250	36,252	29,826	PDGo6E	4,800	2,000	2,450	800/12/4Px1	7.5	1.08x1.27
225	36,252	26,298	PDGo6E	4,800	2,000	2,450	800/12/4Px1	7.5	1.08x1.27
200	26,586	22,482	PDGo5E	4,500	2,000	2,450	800/10/4Px1	5.0	0.7x1.0
180	21,726	19,944	PDGo5E	4,500	2,000	2,450	800/5/4Px1	3.0	0.73x0.74
160	19,944	20,034	PDGo5E	4,500	2,000	2,450	800/5/4Px1	3.0	0.73x0.74
140	19,944	17,838	PDGo4E	4,000	1,850	2,450	710/10/4Px1	3.0	0.73x0.74
125	14,400	17,712	PDGo4E	4,000	1,850	2,450	710/10/4Px1	3.0	0.7 x 0.7
82.5	10,368	12,312	PDGo3E	3,800	1,500	1,850	710/10/4Px1	2.0	0.7 x 0.7
62.5	6,768	8,820	PDGo3E	3,800	1,500	1,850	630/10/4Px1	2.0	0.6 x 0.6
50	6,768	7,524	PDGo3E	3,800	1,500	1,850	630/10/4Px1	2.0	0.5 x 0.5
45	6,768	7,524	PDGo2E	3,000	1,500	1,850	630/10/4Px1	2.0	0.5 x 0.5
40	6,768	6,174	PDGo2E	3,000	1,500	1,850	630/7/4Px1	1.5	0.5 x 0.5
35	6,768	4,464	PDGo2E	3,000	1,500	1,850	630/5/4Px1	1.0	0.5 x 0.5
30	6,768	4,464	PDGo2E	3,000	1,500	1,850	630/5/4Px1	1.0	0.5 x 0.5
25	4,500	3,816	PDGo1E	2,550	1,300	1,850	560/5/4Px1	0.5	0.4 x 0.4

The above enclosure are suitable for both Radiator and Heat exchanger type for respecative capacity engines. It is advisable to locate the Gen-Set away from polluted atmosphere like acidic fumes, cement dust, stone dust,cotton fibers chemicals etc.For high humidity atmp. Anti condensation heaters are mandatory for Alternator.

Perkins

PERKINS TEXTILE HUMIDIFIER

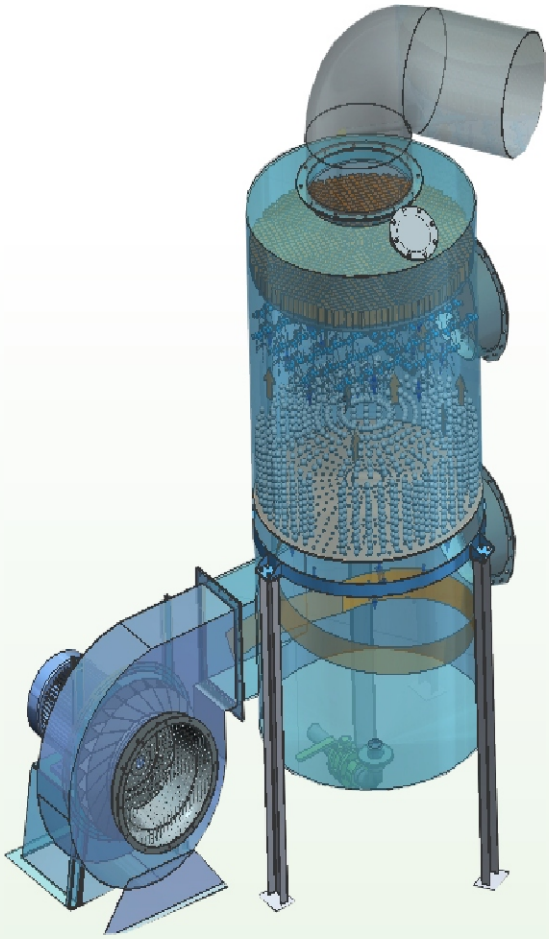

Temperature and humidity play important part in the manufacturing process of textile yarns and fabrics. The properties like dimensions, weight, tensile, strength, elastic recovery, electrical resistance, rigidity etc of all tectile fiber whether nature or synthetic are influenced by Moisture Regain. Some physical properties of textile materials which is affected by is given below:
Strength of COTTON goes up
Elongation %ge goes up
Increases the production etc.

ADIABATIC SATURATION OR EVAPORATIVE COOLING:

In this process air form atmosphere is drawn from the Blower and diffused to form cyclone and comes direct contact with fine water droplets in the bottom of the shell, further the air enters to the middle chamber thru the perforated plate and pass thru stack of wet balls which gives high surface evaporation, than after third chamber is water shower, finally there is high Heat and mass transfer between water and air, the humidity ratio increases, the air gets saturated Max.up to 98%, and the remaining water is recirculated thru the water pump, installed to the sump end. The dry bulb temperature falls almost near to wet bulb temperature, thus cooling effect.

The sensible heat is decreased as the temperature goes down but the latent heat goes up as the water vapour is added to the air. Thus it is transformation of sensible heat. During this process the enthalpy of air remains same.

Perkins Textile Humidifier, has numerous advantages over conventional:
1). Very high saturation efficiency Max.98%.
2). The chamber is completely built up of PPGL + FRP, No rusting and long life.
3). Mixture of spray & surface evaporation give high result.
4). Blower is running in Dry ambient condition.
5). Air passes thru three stages gives high air- filtrations
6). Occupies less floor space for large Air volume.
7). Easy maintenance & can use raw ground water.
8). These systems can be used in re-circulation mode adding one re-circulating in-line fans.
9). This evaporative cooling system can be used for similar industries such as food processing, engineering, chemical, Cement, power stations etc.

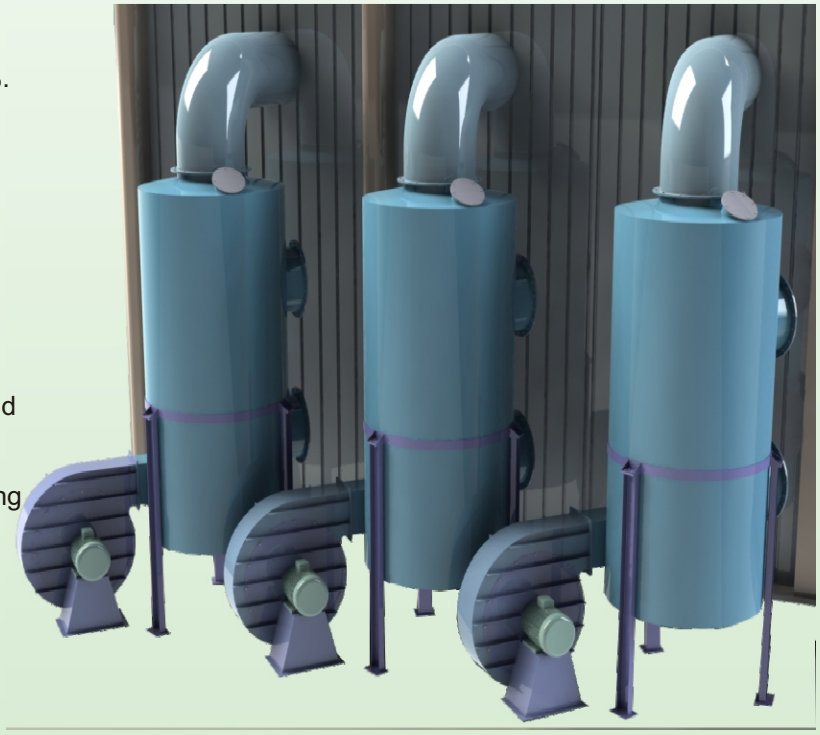

PERKINS

Perkins

Air Filters

The High efficiency Air Filters are manufactured to International Standard using latest high quality media such as washable synthetic (woven & non-woven) / metallic / fire retardant glass fiber / special paper media, supported with wire net and pleated to give huge area for its best performance. We manufacture to cover complete range of Air filters down up 0.1 microns, filtration efficiency upto 99.9% and can operate upto 120Deg Cel. and 100% Relative Humidity.

These filters are tested to maintain the BS: 2831 standards. These filters are specially designed to accommodate numerous applications of air handling units of such as HVAC systems, Air Driers, Humidifiers, clean rooms, petrochemical fertilizer, nuclear stations, pharmaceuticals, power generation stations, compressors, food processing etc.

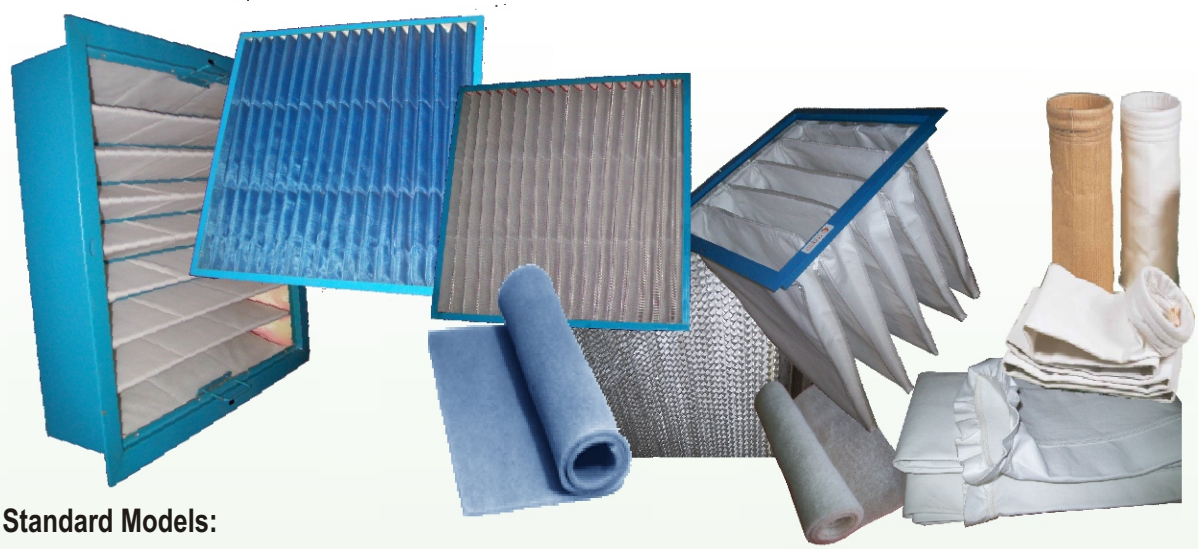

Standard Models:

MODEL	ITEM	DESCRIPTION	Filter Capacity In Microns	Rated face velocity M/Sec	Max. Pressure Drop mm WG
PPF-21A	PREFILTER	Plain Non-Woven, HDPE Netting	70	1 - 2	3
PPF-22B	PREFILTER	25mm Thick Non-Woven, Metallic Netting	50	1 -2	4
PPF-23C	PREFILTER	50mm Thick HDPE Mesh, Metallic Netting	40	1.5 - 2.5	4
PFF-24A	FINEFILTER	50mm Thick Non-Woven, Metallic Netting	20	1.5 - 2.5	8
PFF-25B	FINEFILTER	150mm Thick Non-Woven, Metallic Netting	15	1.5 - 2.5	12
PMF-26A	MICROFILTER	50mm Thick Non-Woven, HDPE Netting	12	1.5 - 2.5	15
PMF-27B	MICROFILTER	150mm Thick Non-Woven, HDPE Netting	10	1.5 - 2.5	18
PMF-28C	MICROFILTER	150mm Thick Non-Woven, HDPE Netting	5	1.5 - 2.5	18
PHF-29A	HEPAFILTER	150mm Thick Paper-Media, Alu. Separator	2	1.0 - 1.5	24
PHF-30B	HEPAFILTER	305mm Thick Paper-Media, Alu. Separator	0.5	1.0 - 1.5	25
PUF-31A	ULPAFILTER	305mm Thick Paper-Media, Alu. Separator	0.1	1.0 - 1.5	28
PBF-32A	BAGFILTER	500mm Deep, Non-Woven, HDPE Netting	5	1.0 - 1.5	18
PBF-33B	BAGFILTER	610mm Deep, Non-Woven, HDPE Netting	5	1.0 - 1.5	22
PARF-34A	AUTOROLL	Fiber-glass Auto-Roll Filter, 65' L Roll	10	1.0 -1.5	22

Above models are readily available in dimensions 610mm(w) x 610mm(h), for other dimensions please contact our engineers.

PERKINS

Perkins

Air Control and Distribution Equipment *(Dampers)*

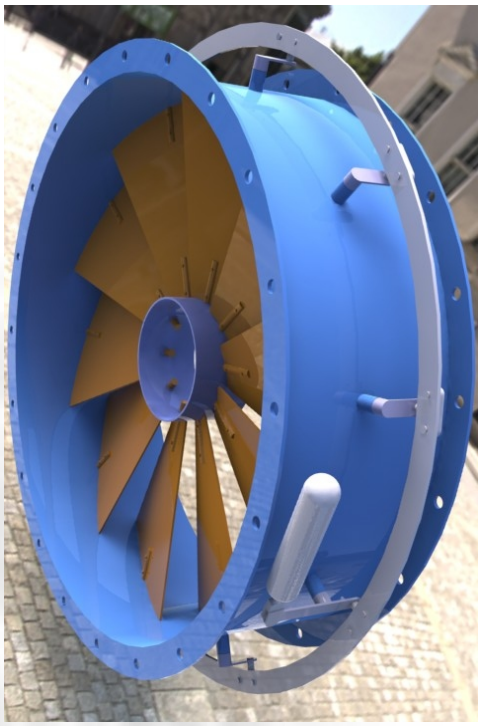

Perkins Air Control Dampers are designed and manufactured for regulation of airflow through fans, ductings, tunnels or chambers. These dampers are well designed to give a uniform control, high efficiency with minimum pressure drop.

The guide vanes are profiled to glide the air with minimum resistance and reduce turbulence. These dampers are manufactured in heavy gauge Mield-Steel, Stainless Steel-SS-304/316, Aluminum and FRP material& rigid construction to handle high velocity gases at max. temperature up to 200 Deg. Cel.

The damper blades are pivoted by high quality steel rod with brass / nylon bushes are provided to give smooth operation and long life.

These dampers are available in both rectangular as well as round cross-section and end flange connections to accommodate with centrifugal, axial fans, round/ rectangular ductings.

Gear operated manually control dampers are available also the dampers can be provided in remote controlled motor operated. The damper connection sizes, the air handling capacity and the nature of application are required to be discussed to select the damper for its efficient running.

For further details please speak to our engineering deptt. on office address.

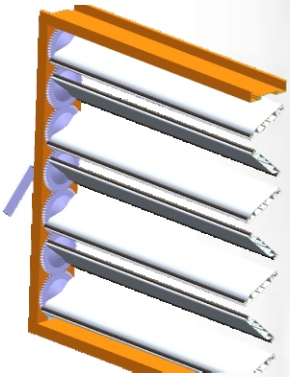

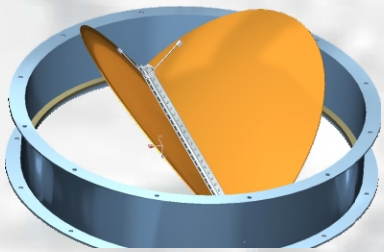

Air Grills and Diffusers

Perkins manufactures wide variety of supply and return air grills. As grills are installed in occupancy area we meet the aesthetic requirements. Grills are manufactured by us in aluminium, mild steel and stainless steel. The louvers are made as per site specific requirements such a single/double louvered, fixed/adjustable louvers etc. Ceiling diffusers are made up of aluminium/steel construction in circular/rectangular shape and in plain elevation (institutional) or dropped down (industrial) arrangements. Grills are used to convey cool and fresh air and also to divert the air as per adjustment of louvers.

PERKINS

Our Eminent Clients

AARTI Steels Ltd

AffiniaMat India Braking Pvt Ltd

ACTION International

Amol Pharmaceuticals Pvt. Ltd.

Bosch Limited

Control & Switch Gear Co. Ltd.

Donaldson India Filteration Systems Pvt. Ltd.

Dabur India Ltd.

DLF Ltd.

Fiem Industries Ltd.

Gillette India Ltd.

Gold Plus GlassIndl. Ltd.

GoodYear India Ltd

GlaxoSmithKline

HAFED

HCL Ltd.

HPCL-Mittal Energy Ltd.

Hindustan Nationa Glassl & Industries Ltd

Hindustan Gums & Chemicals Ltd.

Indomalt Processors P Ltd.

Hero Cycles Ltd.

ITC Limited (Food Division)

Jai Bharat Gums & Chemical Ltd.

J C Fasteners Ltd.

Jai Prakash Associates Ltd. (Cement Division)

JCBL Ltd.

Lakshmi Precision Screws Ltd.

Mec Shot Blasting Equip PL

Mushashi Auto Parts (I) P L

National Engineering Industries Ltd.(NBC)

OSRAM India Pvt. Ltd.

Oriental Carbon & Chemicals Ltd.

Poddar Tyres Ltd.

SABOO Coatings Ltd.

Semco Electric Pvt. Ltd.

Sunstar Overseas Ltd.

Shreyans Industries Ltd.

TCPL Packaging Ltd.

Tarang Kinetics Ltd.

TOYO Springs Ltd

VOGUE Textile Ltd.

Visteon Climate Systems India Ltd.

P E R K I N S

PERKINS BLOWERS CO.

Plot-100, Phase-IV,SEC-57, HSIIDC, NH-1, GT Road,
KUNDLI-131028, SONEPAT, Haryana, India
Phone: +91-130-2371755, 967133755
Email: info@perkinsblowers.com **Website:** www.perkinsblowers.com